PROTECTRON
ELECTROMECH (P) LTD

| DESCRIPTION : MIDI BOLT DOWN FUSE 32V,RoHS. | PART NO: PBFT-LCT-In (REFER TABLE) |
|---|---|

## APPROVALS:

RoHS




## MATERIAL AND FINISH

TOP & BOTTOM HOUSING : NYLON66 (PA66), BLACK COLOR, UL 94-V0.

STRIP : COPPER, Sn PLATED

## ELECTRICAL DATA

VOLTAGE RATING : 32V DC

INTERRUPTING RATING : 1000A @ 32V DC

REFERENCE STANDARD : ISO 8820/UL 248-1

## ENVIRONMENTA DATA

OPERATING TEMPERATURE : -40°C to +120°C

## MECHANICAL DATA

MOUNTING TORQUE M5 : 4.5Nm±1Nm(TO BE TIGHTENED/MOUNTED WITH DIGITAL TORQUE-WRENCH)

Confidential Property of Protectron Electromech Pvt. Ltd. Any unauthorized use or transfer of confidential information may have legal consequences

PROTECTRON
ELECTROMECH (P) LTD

DESCRIPTION : MIDI BOLT DOWN FUSE,32V,RoHS.

PART NO: PBFT-LCT-In
(REFER TABLE)

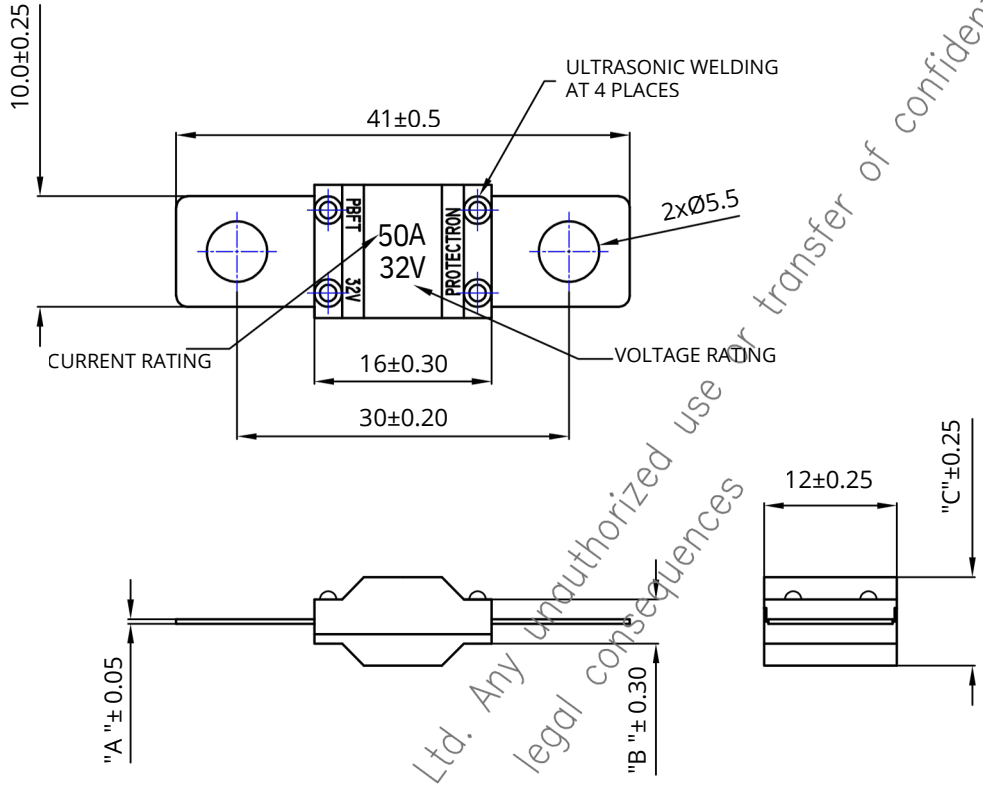


| CURRENT RATING | DIMENSIONS A(±0.05) | DIMENSIONS B(±0.30) | DIMENSIONS C(±0.25) |
|---|---|---|---|
| 20A–80A | 0.40mm | 4mm | 8mm |
| 100A–200A | 0.60mm | 4.3mm | 8.3mm |

NOTE:
1.LASER MARKING WILL BE ON BOTH SIDE OF THE HOUSING.
2.MARKING SHOWN IS TYPICAL, THE POSITION & SIZE OF VARIOUS MARKING ARE SUBJECT TO CHANGE AT THE MANUFACTURE'S DISCRETION.
3.In - NOMINAL CURRENT RATING
4.THE FUSE CHARACTERISTICS MAY CHANGE DEPENDING ON THE CONDITIONS OF USE(AMBIENT TEMPERATURE, CABLE SIZE/CONNECTION, FUSE HOLDER/MOUNTING, ELECTRICAL CONNECTIONS AND PROSPECTIVE FAULT CURRENT).

Confidential Property of Protectron Electromech Pvt. Ltd. Any unauthorized use or transfer of confidential information may have legal consequences

DESCRIPTION : MIDI BOLT DOWN FUSE,32V,RoHS.

PART NO: PBFT-LCT-In
(REFER TABLE)

## PRODUCT DETAILS & PART NUMBER

| PART NUMBERS | CURRENT RATING(In) | CABLE SIZE AS PER ISO 20934 | TYP, COLD RESISTANCE | TYP, VOLTAGE DROP | TYP, I²T (A²S) |
|---|---|---|---|---|---|
| PBFT-LCT-20A | 20A | 2.5 mm² | 3.1 mΩ | 83 mV | 5152 |
| PBFT-LCT-30A | 30A | 2.5 mm² | 2.08 mΩ | 65 mV | 4160 |
| PBFT-LCT-40A | 40A | 4 mm² | 1.5 mΩ | 65 mV | 10208 |
| PBFT-LCT-50A | 50A | 6 mm² | 1.08 mΩ | 65 mV | 13352 |
| PBFT-LCT-60A | 60A | 6 mm² | 0.87 mΩ | 68 mV | 21657 |
| PBFT-LCT-70A | 70A | 10 mm² | 0.72 mΩ | 70 mV | 24125 |
| PBFT-LCT-80A | 80A | 10 mm² | 0.55 mΩ | 58 mV | 24761 |
| PBFT-LCT-100A | 100A | 10 mm² | 0.46 mΩ | 60 mV | 51246 |
| PBFT-LCT-125A | 125A | 16 mm² | 0.4 mΩ | 71 mV | 73354 |
| PBFT-LCT-150A | 150A | 25 mm² | 0.32 mΩ | 77 mV | 81768 |
| PBFT-LCT-175A | 175A | 25 mm² | 0.28 mΩ | 77 mV | 105101 |
| PBFT-LCT-200A | 200A | 35 mm² | 0.23 mΩ | 77 mV | 125253 |

## TIME - CURRENT GRAPH/CURVE

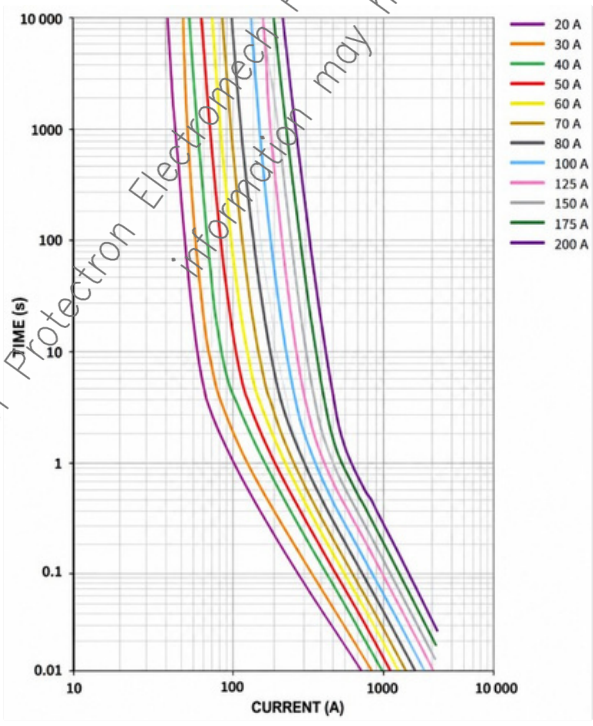


Confidential Property of Protectron Electromech Pvt. Ltd. Any unauthorized use or transfer of confidential information may have legal consequences

PROTECTRON®
ELECTROMECH (P) LTD

DESCRIPTION :MIDI BOLT DOWN FUSE,32V,RoHS.

PART NO: PBFT-LCT-In
(REFER TABLE)

## TIME-CURRENT CHARACTERISTICS(20A-125A)

| % of Ampere Rating (A) | Operating Time | |
|---|---|---|
| | MIN | MAX |
| 100% | 100 hrs. | - |
| 110% | 4 hrs. | - |
| 150% | 90 sec. | 3600 sec. |
| 200% | 3 sec. | 100 sec. |
| 300% | 0.3 sec. | 3 sec. |
| 500% | 0.1 sec. | 1 sec. |

## TIME-CURRENT CHARACTERISTICS(150A-200A)

| % of Ampere Rating (A) | Operating Time | |
|---|---|---|
| | MIN | MAX |
| 75% | 100 hrs. | - |
| 200% | 1 sec. | 15 sec. |
| 350% | 0.3 sec. | 5 sec. |
| 500% | 0.1 sec. | 1 sec. |

## TYPICAL DERATING OF FUSE MELTING

Temperature security margin is 20%.

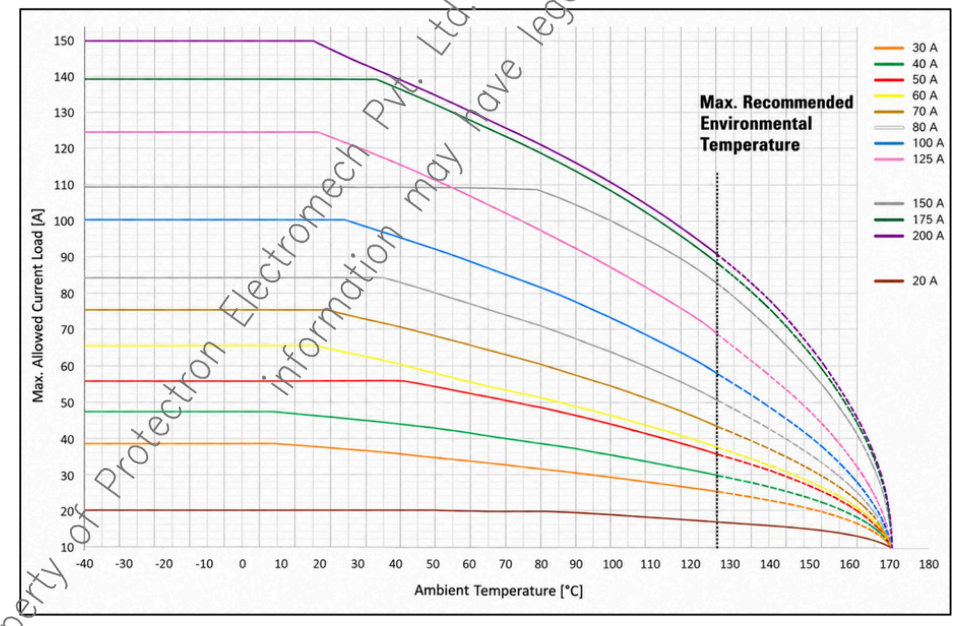


Confidential Property of Protectron Electromech Pvt. Ltd. Any unauthorized use or transfer of confidential information may have legal consequences

MOQ- AS SPECIFIED
SPQ- AS SPECIFIED

## ORDERING INFORMATION

PBFT-LCT-In
(REFER TABLE)

| Projection: | Scale: NTS | Sht. Size: A4 | Gen. Tol.: ±0.15mm ±2° | ALL DIMENSIONS ARE IN MM. IF UNLESS OTHERWISE SPECIFIED. |
|---|---|---|---|---|