DESC : RJ11 SOCKET WITH 4 WIRE 60mm LONG,GREY COLOR

Part No. PCA002525 REV. A

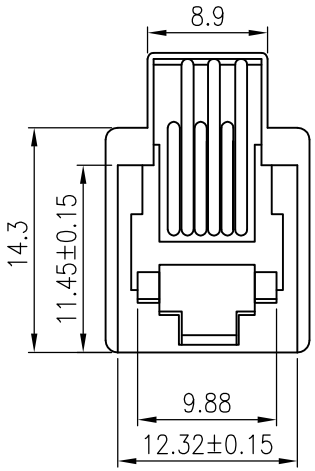

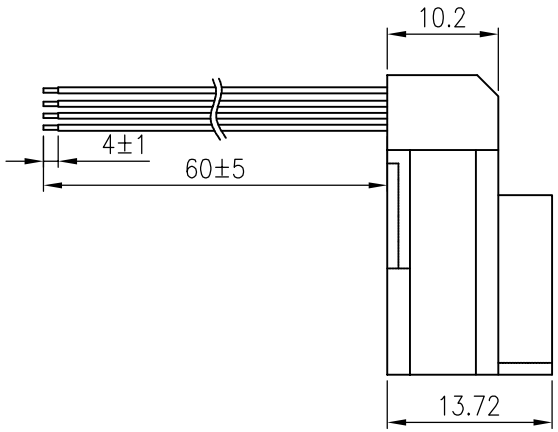

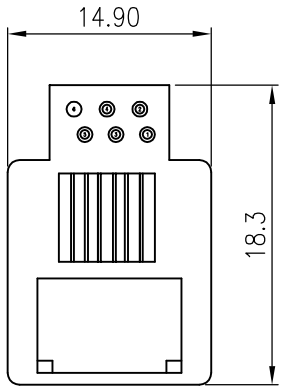

VIEW ON A

ELECTRICAL

CURRENT RATING	:	1.5A
INSULATION RESISTANCE	:	500M OHMS MIN
DIELECTRIC WITHSTANDING	:	500V AC
CONTACT RESISTANCE	:	85m OHMS MAX
DURABILITY	:	500Cycles Min
MATING FORCE	:	250g
CRIMP TENSILE STRENGTH	:	1.0KgMin
RETENTION FORCE	:	1.0KgMin

ENVIRONMENTAL:

OPERATION	:	0°C – 70°C
STORAGE	:	–40°C – +80°C

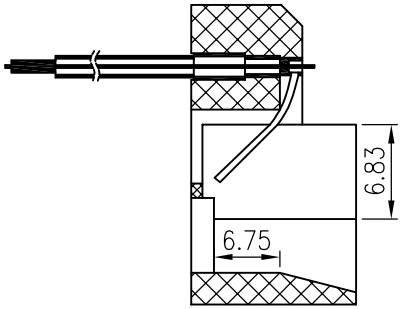

SL.NO.	CABLE COLOUR
1	-------
2	BLACK
3	RED
4	GREEN
5	YELLOW
6	-------

REV.	ZONE	DESCRIPTION	DRG REV BY	DATE
A		ORIGINAL		01.12.2016

DOCUMENT CODE : XXXXXX

ALL DIMENSIONS ARE IN MM. IF UNLESS OTHERWISE SPECIFIED.

MATERIAL & FINISH
Wire: 26AWG(7/Ø0.15)
Housing: ABS Resin
Contact : COPPER ALLOY, GOLD PLATED

HEAT TREATMENT: --

Gen. Tol. ±0.25mm ±2°

PROTECTRON ELECTROMECH (P) LTD. Bangalore, INDIA.

ENGG APP'D :

Surface Finish 1.6 Ra

Scale: NTS

Sht. Size: A4

DRAWN BY : SUMITH

APP'D BY:

DATE : 01.12.2016

This Document is the property of PROTECTRON ELECTROMECH (P) LTD. it shall not be reproduced or communicated to a third party without prior permission.

DWG according to STD. Sheet: 1 OF 1