NON-TRANSFERABLE

TEST REPORT

No. SHL/239/2013-2014/3186/1755 **Date: 26.08.2013**

1.0	NAME AND ADDRESS OF CUSTOMER		**M/s. Protectron Electromech (P) Ltd.** No.44, 29th Cross, 7th Main Road, Banashankari Industrial Layout, Banashankari II Stage Bangalore- 560 070
2.0	CUSTOMERS LETTER REF.		PEPL/ARAI/PTF 300/310713; Dated: 31.07.2013
3.0	DESCRIPTION OF TEST COMPONENT:		
	a.	Name of The Component	Mini Blade Fuse
	b.	Name of The Manufacturer	M/s. Protectron Electromech (P) Ltd. No.44, 29th Cross, 7th Main Road, Banashankari Industrial Layout, Banashankari II Stage Bangalore- 560 070
	c.	Part No.:	PTF 300 5A/-A
	d.	Model/ Type No.	PTF 300 Series
	e.	Fuse Rating	5A
	f.	Drawing No.	Bearing part no. PTF 300 5A/-A; Rev. No. A

4.0 TEST OBJECTIVE:

To evaluate performance of electric fuse as per the test- requirements given in Cl. No. 4.3.3 of AIS 028 and Cl. No. 12 (c) of AIS 026.

5.0 TEST REQUIREMENTS / RESULTS:

Requirements of AIS 028 Cl. No. 4.3.3 and Cl. No. 12 (c) of AIS 026. for electrical fuse are given below in Table

Sr. No.	Rated current of the fuse	Current supplied to the Fuse at 12 V / 24 V DC	Requirement	Observations
I.	5 Amps	135% of the rated current i.e. 6.75 A	Fuse element shall fuse within 60 seconds.	I) 1st Sample Fused in 05 sec. ii) 2nd Sample Fused in 07sec. iii) 3rdSample Fused in 04 sec. **Observation : *Complies***
		110% of the rated current i.e. 5.5 A	Fuse element shall not fuse within 60 min.	*The fuse element did not fuse when the current of 5.5 A was passed through it for 62 minutes.* ***Observation : Complies***

6.0 CONCLUSION:

Mini Blade Fuse having rating of 5 A and its detailed specified in Sr. No.3 manufacture and submitted by M/s. Protectron Electromech (P) Ltd., Bangalore, ***Complies*** with the test requirements when tested as per Cl. No. 4.3.3 of AIS: 028 and Cl. No. 12 (c) of AIS 026

PREPARED BY	CHECKED BY	APPROVED BY
S. N. LONDHE DEPUTY ENGINEER	A.D. DEKATE MANAGER	M. SREENIVASULU DEPUTY GENRAL MANAGER-SHL

Place of Issue: PUNE **Date of Issue:** _____

Disclaimer:

This test report pertains only to the components / parts / assemblies / vehicles etc. actually tested at ARAI in the presented condition based on the documents / information produced / submitted by the customer. The issuance of this test report alone does not indicate any measure of approval, certification, supervision, control of quality surveillance by ARAI of the product. No extract, abridgement or abstraction from this test report shall be published or used to advertise the product without the written consent of the Director, ARAI, who reserves the absolute right to agree or reject all or any of the details of any items of publicity for which consent may be sought. ARAI is in no way responsible for any misuse of copying of any design / type / system in connection with entire vehicle / components / parts and assemblies. Breach of any statutory provision of Indian laws or laws of other countries, will be the sole responsibility of the customer and ARAI shall not be liable for any claims or damages, made by the party, whatsoever, the customer shall alone be liable for the same, and undertakes to indemnify ARAI in this regard. Further, the ARAI has the right to initiate cancellation / withdrawal of the certificate issued, in case of any fraud, misrepresentation, when it surfaces and comes in the knowledge of ARAI. **The appropriate local courts at Pune shall have the jurisdiction in respect of any dispute, claim or liability arising out of this report.**

L:\S&H\S & H data\Testreports13-14\Main-OC\239-CNGLPG\3186_1314_(Fuse_5A_Protectron).doc

ARAI
Progress through Research
THE AUTOMOTIVE RESEARCH ASSOCIATION OF INDIA

Regd. Office : S. No. 102, Vetal Hill, Off Paud Road, Kothrud, Pune - 411 038 (India) Postal Address : P. B. No. 832, Pune - 411 004 (India)
Tel : +91-20-3023 1001, Fax : +91-20-3023 1104, Email : director@araiindia.com
Website : www.araiindia.com

DESC : MINI BLADE FUSE, RoHS COMPLIANT

Part No. PTF 300 5A/-A REV. A

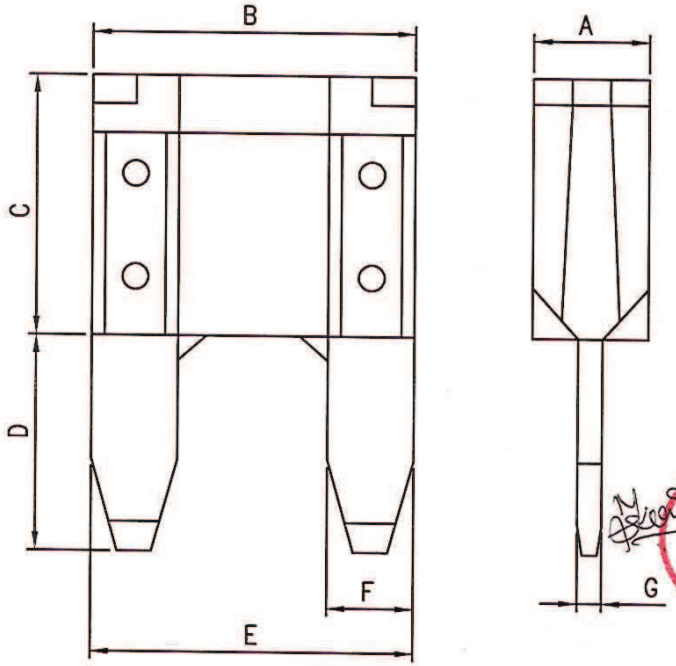

DRAWING REFERENCE	DIMENSION IN (mm) MINIMUM	MAXIMUM
A	–	4.0
B	–	11.20
C	–	9.0
D	7.0	8.0
E	10.6	11.20
F	2.6	3.0
G	0.78	0.88

NOMINAL CURRENT RATING (In)	BODY COLOUR	PART NO.
5A	TAN	PTF 300 5A/-A

ELECTRICAL CHARACTERISTICS

% OF AMPERE RATING	AMPERE RATING	OPENING TIME
110%	5Amp	>60minutes
135%	5Amp	<60seconds

BILL OF MATERIAL:

DESCRIPTION	MATERIAL	FINISH	QTY/ASSY
INSULATOR BODY	NYLON 66	TAN COLOR	1no.
ELEMENT	ZINC ALLOY	TIN/SILVER PLATED	1no.

ARAI
Progress through Research
THE AUTOMOTIVE RESEARCH ASSOCIATION OF INDIA

For Protectron Electromech (P) Ltd.,
Authorised Signatory
Protectron Electromech Pvt Ltd
No.44, 29th Cross, 7th Main Road,
Banashankari Industrial Layout,
Banashankari 2nd Stage
BANGALORE - 560 070
Ph 26716001/02/03/04/05

TEST REPORT No. SHL/239/2013-2014/3186/1755

DESIGN STANDARDS :

1. UL275A STANDARD FOR AUTOMOTIVE BLADE FUSES / SAE2077 / JASO D612

RATED VOLTAGE : DC 32V OR LESS

MARKINGS ON THE FUSE SHOULD BE AS FOLLOWS:-

'CURRENT RATING IN AMPS', 'VOLTAGE RATING' AND 'PROTECTRON' (MANUFACTURER'S NAME)

Page No. 2 of 2

REV.	ZONE	DESCRIPTION	DRG REV BY	DATE
A		ORIGINAL		08.04.2013

DOCUMENT CODE : XXXXXX

MATERIAL & FINISH: TAN NYLON 66, UL94-V0 0.80mm THICK ZINC, TIN / SILVER PLATED

HEAT TREATMENT: --

ENGG APP'D :

DRAWN BY : SACHIN

DATE : 08.04.2013

APP'D BY:

Gen. Tol. ±0.1mm ±1°

Surface Finish 1.6 Ra

Scale: NTS

Sht. Size: A4

ALL DIMENSIONS ARE IN MM. IF UNLESS OTHERWISE SPECIFIED.

PROTECTRON ELECTROMECH (P) LTD. Bangalore, INDIA.

This Document is the property of PROTECTRON ELECTROMECH (P) LTD. it shall not be reproduced or communicated to a third party without prior permission.

DWG according to STD. Sheet: 1 OF 1

CAD PATH :- Y:\Work_Design\XXXXXX\XXXXXXX

NON-TRANSFERABLE

TEST REPORT

No. SHL/239/2013-2014/3186/1756 **Date: 26.08.2013**

1.0	**NAME AND ADDRESS OF CUSTOMER**		**M/s. Protectron Electromech (P) Ltd.** No.44, 29th Cross, 7th Main Road, Banashankari Industrial Layout, Banashankari II Stage Bangalore- 560 070
2.0	**CUSTOMERS LETTER REF.**		PEPL/ARAI/PTF 300/310713; Dated: 31.07.2013
3.0	**DESCRIPTION OF TEST COMPONENT:**		
	a.	**Name of The Component**	Mini Blade Fuse
	b.	**Name of The Manufacturer**	M/s. Protectron Electromech (P) Ltd. No.44, 29th Cross, 7th Main Road, Banashankari Industrial Layout, Banashankari II Stage Bangalore- 560 070
	c.	**Part No.:**	PTF 300 10A/-A
	d.	**Model/ Type No.**	PTF 300 Series
	e.	**Fuse Rating**	10A
	f.	**Drawing No.**	Bearing part no. PTF 300 10A/-A; Rev. A

4.0 TEST OBJECTIVE:

To evaluate performance of electric fuse as per the test- requirements given in Cl. No. 4.3.3 of AIS 028 and Cl. No. 12 (c) of AIS 026.

5.0 TEST REQUIREMENTS / RESULTS:

Requirements of AIS 028 Cl. No. 4.3.3 and Cl. No. 12 (c) of AIS 026. for electrical fuse are given below in Table

Sr. No.	Rated current of the fuse	Current supplied to the Fuse at 12 V / 24 V DC	Requirement	Observations
I.	10 Amps	135% of the rated current i.e. 13.5 A	Fuse element shall fuse within 60 seconds.	I) 1st Sample Fused in 48 sec. ii) 2nd Sample Fused in 51 sec. iii) 3rd Sample Fused in 46 sec. **Observation : *Complies***
		110% of the rated current i.e. 11.0 A	Fuse element shall not fuse within 60 min.	*The fuse element did not fuse when the current of 11A was passed through it for 62 minutes.* ***Observation : Complies***

6.0 CONCLUSION:

Mini Blade Fuse having rating of 10A and its detailed specified in Sr. No.3 manufactured and submitted by M/s. Protectron Electromech (P) Ltd., Bangalore, ***Complies*** with the test requirements when tested as per Cl. No. 4.3.3 of AIS: 028 and Cl. No. 12 (c) of AIS 026.

PREPARED BY	CHECKED BY	APPROVED BY
S. N. LONDHE DEPUTY ENGINEER	A.D. DEKATE MANAGER	for M. SREENIVASULU DEPUTY GENRAL MANAGER-SHL

Place of Issue: PUNE **Date of Issue:** _____

Disclaimer:

This test report pertains only to the components / parts / assemblies / vehicles etc. actually tested at ARAI in the presented condition based on the documents / information produced / submitted by the customer. The issuance of this test report alone does not indicate any measure of approval, certification, supervision, control of quality surveillance by ARAI of the product. No extract, abridgement or abstraction from this test report shall be published or used to advertise the product without the written consent of the Director, ARAI, who reserves the absolute right to agree or reject all or any of the details of any items of publicity for which consent may be sought. ARAI is in no way responsible for any misuse of copying of any design / type / system in connection with entire vehicle / components / parts and assemblies. Breach of any statutory provision of Indian laws or laws of other countries, will be the sole responsibility of the customer and ARAI shall not be liable for any claims or damages, made by the party, whatsoever, the customer shall alone be liable for the same, and undertakes to indemnify ARAI in this regard. Further, the ARAI has the right to initiate cancellation / withdrawal of the certificate issued, in case of any fraud, misrepresentation, when it surfaces and comes in the knowledge of ARAI. **The appropriate local courts at Pune shall have the jurisdiction in respect of any dispute, claim or liability arising out of this report.**

L:\S&H\S & H data\Testreports13-14\Main-OC\239-CNGLPG\3186_1314_(Fuse_10A_Protechtron).doc

ARAI
Progress through Research
THE AUTOMOTIVE RESEARCH ASSOCIATION OF INDIA

ISO 14001 TÜV SÜD ISO 9001
Regd. Office : S. No. 102, Vetal Hill, Off Paud Road, Kothrud, Pune - 411 038 (India) Postal Address : P. B. No. 832, Pune - 411 004 (India)
Tel. : +91-20-3023 1111, Fax : +91-20-3023 1104, Email : director@araiindia.com
Website : www.araiindia.com

DESC : MINI BLADE FUSE, RoHS COMPLIANT

Part No. PTF 300 10A/-A REV: A

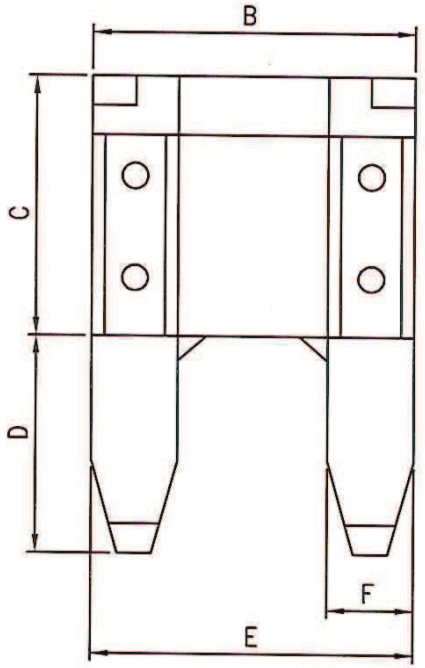

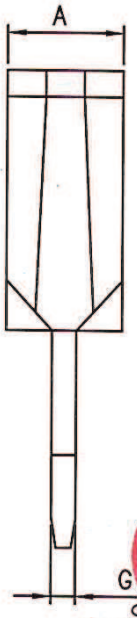

DRAWING REFERENCE	DIMENSION IN (mm)	
	MINIMUM	MAXIMUM
A	–	4.0
B	–	11.20
C	–	9.0
D	7.0	8.0
E	10.6	11.20
F	2.6	3.0
G	0.78	0.88

NOMINAL CURRENT RATING (In)	BODY COLOUR	PART NO.
10A	RED	PTF 300 10A/-A

ELECTRICAL CHARACTERISTICS

% OF AMPERE RATING	AMPERE RATING	OPENING TIME
110%	10Amp	>60minutes
135%	10Amp	<60seconds

Test Reports No. SHU/23/2013/3186/17576.

BILL OF MATERIAL:

DESCRIPTION	MATERIAL	FINISH	QTY/ASSY
INSULATOR BODY	NYLON 66	RED COLOR	1no.
ELEMENT	ZINC ALLOY	TIN/SILVER PLATED	1no.

ARAI
Progress through Research
THE AUTOMOTIVE RESEARCH ASSOCIATION OF INDIA

For Protectron Electromech (P) Ltd.,

Authorised Signatory

Protectron Electromech Pvt Ltd
No.44, 29th Cross, 7th Main Road,
Banashankari Industri[illegible]yout,
Banashankari 2nd Stage
BANGALORE - 560 070
Ph 26716001/02/03/04/05

Page No. 2 of 2.

DESIGN STANDARDS :

1. UL275A STANDARD FOR AUTOMOTIVE BLADE FUSES / SAE2077 / JASO D612

RATED VOLTAGE : DC 32V OR LESS

MARKINGS ON THE FUSE SHOULD BE AS FOLLOWS:-

'CURRENT RATING IN AMPS', 'VOLTAGE RATING' AND 'PROTECTRON' (MANUFACTURER'S NAME)

REV.	ZONE	DESCRIPTION	DRG REV BY	DATE
A		ORIGINAL		08.04.2013

DOCUMENT CODE : XXXXXX

MATERIAL & FINISH: RED NYLON 66, UL94-V0 0.80mm THICK ZINC, TIN / SILVER PLATED

HEAT TREATMENT: --

ENGG APP'D:

DRAWN BY : SACHIN

DATE : 08.04.2013

APP'D BY:

Gen. Tol. ±0.1mm ±1°

Surface Finish 1.6 Ra

Scale: NTS

Sht. Size: A4

ALL DIMENSIONS ARE IN MM. IF UNLESS OTHERWISE SPECIFIED.

PROTECTRON ELECTROMECH (P) LTD. Bangalore, INDIA.

This Document is the property of PROTECTRON ELECTROMECH (P) LTD. it shall not be reproduced or communicated to a third party without prior permission.

DWG according to STD. Sheet: 1 OF 1

CAD PATH :- Y:\Work_Design\XXXXXX\XXXXXXX

NON-TRANSFERABLE

TEST REPORT

No. SHL/239/2013-2014/3186/1757 **Date: 26.08.2013**

1.0	NAME AND ADDRESS OF CUSTOMER		M/s. Protectron Electromech (P) Ltd. No.44, 29th Cross, 7th Main Road, Banashankari Industrial Layout, Banashankari II Stage Bangalore- 560 070
2.0	CUSTOMERS LETTER REF.		PEPL/ARAI/PTF 300/310713; Dated: 31.07.2013
3.0	DESCRIPTION OF TEST COMPONENT:		
	a.	Name of The Component	Mini Blade Fuse
	b.	Name of The Manufacturer	M/s. Protectron Electromech (P) Ltd. No.44, 29th Cross, 7th Main Road, Banashankari Industrial Layout, Banashankari II Stage Bangalore- 560 070
	c.	Part No.:	PTF 300 15A/-A
	d.	Model/ Type No.	PTF 300 Series
	e.	Fuse Rating	15A
	f.	Drawing No.	Bearing part no. PTF 300 15A/-A; Rev. No. A

4.0 TEST OBJECTIVE:

To evaluate performance of electric fuse as per the test- requirements given in Cl. No. 4.3.3 of AIS 028 and Cl. No. 12 (c) of AIS 026.

5.0 TEST REQUIREMENTS / RESULTS:

Requirements of AIS 028 Cl. No. 4.3.3 and Cl. No. 12 (c) of AIS 026 for electrical fuse are given below in Table

Sr. No.	Rated current of the fuse	Current supplied to the Fuse at 12 V / 24 V DC	Requirement	Observations
I.	15 Amps	135% of the rated current i.e. 20.25 A	Fuse element shall fuse within 60 seconds.	I) 1st Sample Fused in 20 sec. ii) 2nd Sample Fused in 15 sec. iii) 3rd Sample Fused in 23 sec. **Observation : *Complies***
		110% of the rated current i.e. 16.5 A	Fuse element shall not fuse within 60 min.	*The fuse element did not fuse when the current of 16.5 A was passed through it for 62 minutes.* ***Observation : Complies***

6.0 CONCLUSION:

Mini Blade Fuse having rating of 15A and its detailed specified in Sr. No.3 manufactured and submitted by M/s. Protectron Electromech (P) Ltd., Bangalore, ***Complies*** with the test requirements when tested as per Cl. No. 4.3.3 of AIS: 028 and Cl. No. 12 (c) of AIS 026.

PREPARED BY	CHECKED BY	APPROVED BY
S. N. LONDHE DEPUTY ENGINEER	A.D. DEKATE MANAGER	M. SREENIVASULU DEPUTY GENRAL MANAGER-SHL

Place of Issue: PUNE **Date of Issue:** _____

Disclaimer:

This test report pertains only to the components / parts / assemblies / vehicles etc. actually tested at ARAI in the presented condition based on the documents / information produced / submitted by the customer. The issuance of this test report alone does not indicate any measure of approval, certification, supervision, control of quality surveillance by ARAI of the product. No extract, abridgement or abstraction from this test report shall be published or used to advertise the product without the written consent of the Director, ARAI, who reserves the absolute right to agree or reject all or any of the details of any items of publicity for which consent may be sought. ARAI is in no way responsible for any misuse of copying of any design / type / system in connection with entire vehicle / components / parts and assemblies. Breach of any statutory provision of Indian laws or laws of other countries, will be the sole responsibility of the customer and ARAI shall not be liable for any claims or damages, made by the party, whatsoever, the customer shall alone be liable for the same, and undertakes to indemnify ARAI in this regard. Further, the ARAI has the right to initiate cancellation / withdrawal of the certificate issued, in case of any fraud, misrepresentation, when it surfaces and comes in the knowledge of ARAI. **The appropriate local courts at Pune shall have the jurisdiction in respect of any dispute, claim or liability arising out of this report.**

ARAI Progress through Research THE AUTOMOTIVE RESEARCH ASSOCIATION OF INDIA

Regd. Office : S. No. 102, Vetal Hill, Off Paud Road, Kothrud, Pune - 411 038 (India) Postal Address : P. B. No. 832, Pune - 411 004 (India)
Tel. : +91-20-3023 1111, Fax : +91-20-3023 1104, Email : director@araiindia.com
Website : www.araiindia.com

DESC : MINI BLADE FUSE, RoHS COMPLIANT

Part No. PTF 300 15A/-A | REV. A

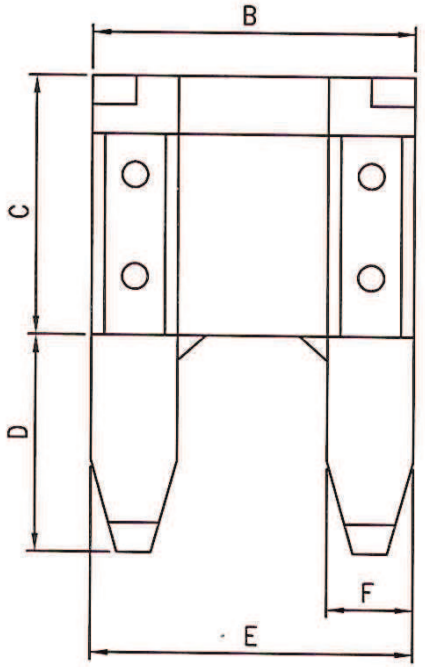

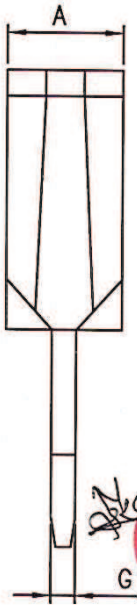

DRAWING REFERENCE	DIMENSION IN (mm)	
	MINIMUM	MAXIMUM
A	–	4.0
B	–	11.20
C	–	9.0
D	7.0	8.0
E	10.6	11.20
F	2.6	3.0
G	0.78	0.88

NOMINAL CURRENT RATING (In)	BODY COLOUR	PART NO.
15A	BLUE	PTF 300 15A/-A

ELECTRICAL CHARACTERISTICS

% OF AMPERE RATING	AMPERE RATING	OPENING TIME
110%	15Amp	>60minutes
135%	15Amp	<60seconds

BILL OF MATERIAL:

DESCRIPTION	MATERIAL	FINISH	QTY/ASSY
INSULATOR BODY	NYLON 66	BLUE COLOR	1no.
ELEMENT	ZINC ALLOY	TIN/SILVER PLATED	1no.

ARAI
Progress through Research
THE AUTOMOTIVE RESEARCH ASSOCIATION OF INDIA

For Protectron Electromech (P) Ltd.,

Authorised Signatory

Protectron Electromech Pvt Ltd
No.44, 29th Cross, 7th Main Road,
Banashankari Industrial Layout,
Banashankari 2nd Stage
BANGALORE - 560 070
Ph 26716001/02/03/04/05

Test Report No. SHU1231203-2014/3186/1757

Page No. 2 of 2

DESIGN STANDARDS :

1. UL275A STANDARD FOR AUTOMOTIVE BLADE FUSES / SAE2077 / JASO D612

RATED VOLTAGE : DC 32V OR LESS

MARKINGS ON THE FUSE SHOULD BE AS FOLLOWS:-

'CURRENT RATING IN AMPS', 'VOLTAGE RATING' AND 'PROTECTRON' (MANUFACTURER'S NAME)

REV.	ZONE	DESCRIPTION	DRG REV BY	DATE
A		ORIGINAL		08.04.2013

DOCUMENT CODE : XXXXXX

MATERIAL & FINISH: BLUE NYLON 66, UL94-V0 0.80mm THICK ZINC, TIN / SILVER PLATED

HEAT TREATMENT: --

ENGG APP'D :

DRAWN BY : SACHIN

DATE : 08.04.2013

APP'D BY:

Gen. Tol. ±0.1mm ±1°

Surface Finish 1.6 Ra

Scale: NTS

Sht. Size: A4

ALL DIMENSIONS ARE IN MM. IF UNLESS OTHERWISE SPECIFIED.

PROTECTRON ELECTROMECH (P) LTD. Bangalore, INDIA.

This Document is the property of PROTECTRON ELECTROMECH (P) LTD. it shall not be reproduced or communicated to a third party without prior permission.

DWG according to STD. | Sheet: 1 OF 1

CAD PATH :- Y:\Work_Design\XXXXXX\XXXXXXX

NON-TRANSFERABLE

TEST REPORT

No. SHL/239/2013-2014/1575/1435 **Date: 01.07.2013**

1.0	NAME AND ADDRESS OF CUSTOMER		**M/s. Protectron Electromech (P) Ltd.** No.44, 29th Cross, 7th Main Road, Banashankari Industrial Layout, Banashankari II Stage Bangalore- 560 070
2.0	CUSTOMERS LETTER REF.		PEPL/ARAI/PTF 300/050613; Dated: 05.06.2013
3.0	DESCRIPTION OF TEST COMPONENT:		
	a.	Name of The Component	Mini Blade Fuse
	b.	Name of The Manufacturer	M/s. Protectron Electromech (P) Ltd. No.44, 29th Cross, 7th Main Road, Banashankari Industrial Layout, Banashankari II Stage Bangalore- 560 070
	c.	Part No.:	PTF 300 30A/-A
	d.	Fuse Rating	30A
	e.	Drawing No.	Bearing part no. PTF 300 30A/-A

4.0 TEST OBJECTIVE:

To evaluate performance of electric fuse as per the test- requirements given in Cl. No. 4.3.3 of AIS 028 and Cl. No. 12 (c) of AIS 026.

5.0 TEST REQUIREMENTS / RESULTS:

Requirements of AIS 028 Cl. No. 4.3.3 and Cl. No. 12 (c) of AIS 026. for electrical fuse are given below in Table

Sr. No.	Rated current of the fuse	Current supplied to the Fuse at 12 V / 24 V DC	Requirement	Observations
I.	30 Amps	135% of the rated current i.e. 40.50 A	Fuse element shall fuse within 60 seconds.	I) 1st Sample Fused in 49 sec. ii) 2nd Sample Fused in 54 sec. iii) 3rdSample Fused in 52 sec. **Observation : *Complies***
		110% of the rated current i.e. 33.0 A	Fuse element shall not fuse within 60 min.	*The fuse element did not fuse when the current of 33 A was passed through it for 62 minutes.* ***Observation : Complies***

6.0 CONCLUSION:

Mini Blade Fuse having rating of 30A and its detailed specified in Sr. No.3 submitted by M/s. Protectron Electromech (P) Ltd., Bangalore, ***Complies*** with the test requirements when tested as per Cl. No. 4.3.3 of AIS: 028

PREPARED BY	CHECKED BY	APPROVED BY
S. N. LONDHE DEPUTY ENGINEER	A.D. DEKATE MANAGER	M. SREENIVASULU DEPUTY GENRAL MANAGER-SHL

Place of Issue: PUNE
Date of Issue: 1/7/13.

Disclaimer:

This test report pertains only to the components / parts / assemblies / vehicles etc. actually tested at ARAI in the presented condition based on the documents / information produced / submitted by the customer. The issuance of this test report alone does not indicate any measure of approval, certification, supervision, control of quality surveillance by ARAI of the product. No extract, abridgement or abstraction from this test report shall be published or used to advertise the product without the written consent of the Director, ARAI, who reserves the absolute right to agree or reject all or any of the details of any items of publicity for which consent may be sought. ARAI is in no way responsible for any misuse of copying of any design / type / system in connection with entire vehicle / components / parts and assemblies. Breach of any statutory provision of Indian laws or laws of other countries, will be the sole responsibility of the customer and ARAI shall not be liable for any claims or damages, made by the party, whatsoever, the customer shall alone be liable for the same, and undertakes to indemnify ARAI in this regard. Further, the ARAI has the right to initiate cancellation / withdrawal of the certificate issued, in case of any fraud, misrepresentation, when it surfaces and comes in the knowledge of ARAI. **The appropriate local courts at Pune shall have the jurisdiction in respect of any dispute, claim or liability arising out of this report.**

L:\S&HS & H data\Testreports13-14\Main-OC\239-CNGLPG\1575_1314_(Fuse_30A_Protechtron).doc

ARAI
Progress through Research
THE AUTOMOTIVE RESEARCH ASSOCIATION OF INDIA

ISO 14001 TUV SUD ISO 9001 OHSAS 18001
Regd. Office : S. No. 102, Vetal Hill, Off Paud Road, Kothrud, Pune - 411 038 (India) Postal Address : P. B. No. 832, Pune - 411 004 (India)
Tel. : +91-20-3023 1111, Fax : +91-20-3023 1104, Email : director@araiindia.com
Website : www.araiindia.com

DESC : MINI BLADE FUSE, RoHS COMPLIANT

Part No. PTF 300 30A/-A REV. A

TEST REPORT NO. SHL/239/2013-2014/1575/1435.

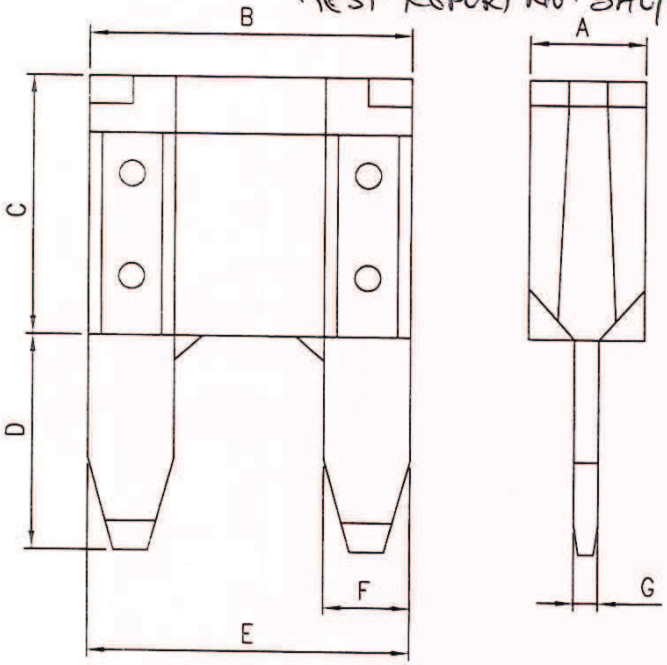

DRAWING REFERENCE	DIMENSION IN (mm)	
	MINIMUM	MAXIMUM
A	–	4.0
B	–	11.20
C	–	9.0
D	7.0	8.0
E	10.6	11.20
F	2.6	3.0
G	0.78	0.88

NOMINAL CURRENT RATING (In)	BODY COLOUR	PART NO.
30A	GREEN	PTF 300 30A/-A

ELECTRICAL CHARACTERISTICS

% OF AMPERE RATING	AMPERE RATING	OPENING TIME
110%	30Amp	>60minutes
135%	30Amp	<60seconds

BILL OF MATERIAL:

DESCRIPTION	MATERIAL	FINISH	QTY/ASSY
INSULATOR BODY	NYLON 66	GREEN COLOR	1no.
ELEMENT	ZINC ALLOY	TIN/SILVER PLATED	1no.

ARAI
Progress through Research
THE AUTOMOTIVE RESEARCH ASSOCIATION OF INDIA

For Protectron Electromech (P) Ltd.,

Authorised Signatory
Protectron Electromech Pvt Ltd
No.44, 29th Cross, 7th Main Road,
Banashankari Industrial Layout,
Banashankari 2nd Stage
BANGALORE - 560 070
Ph 26716001/02/03/04/05

PTF 300 30 PROTECTRON 32V

page 2 of 2.

DESIGN STANDARDS :

1. UL275A STANDARD FOR AUTOMOTIVE BLADE FUSES / SAE2077 / JASO D612

RATED VOLTAGE : DC 32V OR LESS

MARKINGS ON THE FUSE SHOULD BE AS FOLLOWS:-

'CURRENT RATING IN AMPS', 'VOLTAGE RATING' AND 'PROTECTRON' (MANUFACTURER'S NAME)

REV.	ZONE	DESCRIPTION	CHECKED BY	DATE
A		ORIGINAL		08.04.2013

DOCUMENT CODE : __

MATERIAL & FINISH: GREEN NYLON 66, UL94-V0 0.80mm THICK ZINC, TIN / SILVER PLATED

HEAT TREATMENT: --

DRAWN BY : SACHIN

DATE : 08.04.2013

APP'D BY:

Gen. Tol. ±0.1mm ±0.2"

Surface Finish 1.6 Ra

Scale: NTS

Sht. Size: A4

ALL DIMENSIONS ARE IN MM. IF UNLESS OTHERWISE SPECIFIED.

PROTECTRON ELECTROMECH (P) LTD. Bangalore, INDIA.

This Document is the property of PROTECTRON ELECTROMECH (P) LTD. it shall not be reproduced or communicated to a third party without prior permission.

DWG according to STD. Sheet: 1 OF 1

DESC : MINI BLADE FUSE, RoHS COMPLIANT

Part No. PTF 300 30A/-A REV. A

TEST REPORT NO. SHL/239/2013-2014/1575/1435.

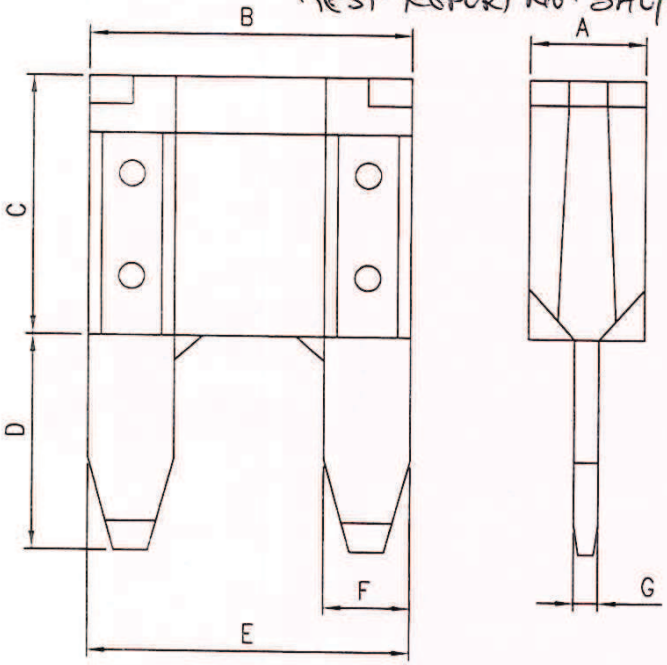

DRAWING REFERENCE	DIMENSION IN (mm)	
	MINIMUM	MAXIMUM
A	–	4.0
B	–	11.20
C	–	9.0
D	7.0	8.0
E	10.6	11.20
F	2.6	3.0
G	0.78	0.88

NOMINAL CURRENT RATING (In)	BODY COLOUR	PART NO.
30A	GREEN	PTF 300 30A/-A

ELECTRICAL CHARACTERISTICS

% OF AMPERE RATING	AMPERE RATING	OPENING TIME
110%	30Amp	>60minutes
135%	30Amp	<60seconds

BILL OF MATERIAL:

DESCRIPTION	MATERIAL	FINISH	QTY/ASSY
INSULATOR BODY	NYLON 66	GREEN COLOR	1no.
ELEMENT	ZINC ALLOY	TIN/SILVER PLATED	1no.

ARAI
Progress through Research
THE AUTOMOTIVE RESEARCH ASSOCIATION OF INDIA

For Protectron Electromech (P) Ltd.,

Authorised Signatory
Protectron Electromech Pvt Ltd
No.44, 29th Cross, 7th Main Road,
Banashankari Industrial Layout,
Banashankari 2nd Stage
BANGALORE - 560 070
Ph 26716001/02/03/04/05

PTF 300 30 PROTECTRON 32V

page 2 of 2.

DESIGN STANDARDS :

1. UL275A STANDARD FOR AUTOMOTIVE BLADE FUSES / SAE2077 / JASO D612

RATED VOLTAGE : DC 32V OR LESS

MARKINGS ON THE FUSE SHOULD BE AS FOLLOWS:-

'CURRENT RATING IN AMPS', 'VOLTAGE RATING' AND 'PROTECTRON' (MANUFACTURER'S NAME)

REV.	ZONE	DESCRIPTION	CHECKED BY	DATE
A		ORIGINAL		08.04.2013

DOCUMENT CODE : __

MATERIAL & FINISH: GREEN NYLON 66, UL94-V0 0.80mm THICK ZINC, TIN / SILVER PLATED

HEAT TREATMENT: --

DRAWN BY : SACHIN

DATE : 08.04.2013

APP'D BY:

Gen. Tol. ±0.1mm ±0.2"

Surface Finish 1.6 Ra

Scale: NTS

Sht. Size: A4

ALL DIMENSIONS ARE IN MM. IF UNLESS OTHERWISE SPECIFIED.

PROTECTRON ELECTROMECH (P) LTD. Bangalore, INDIA.

This Document is the property of PROTECTRON ELECTROMECH (P) LTD. it shall not be reproduced or communicated to a third party without prior permission.

DWG according to STD. Sheet: 1 OF 1